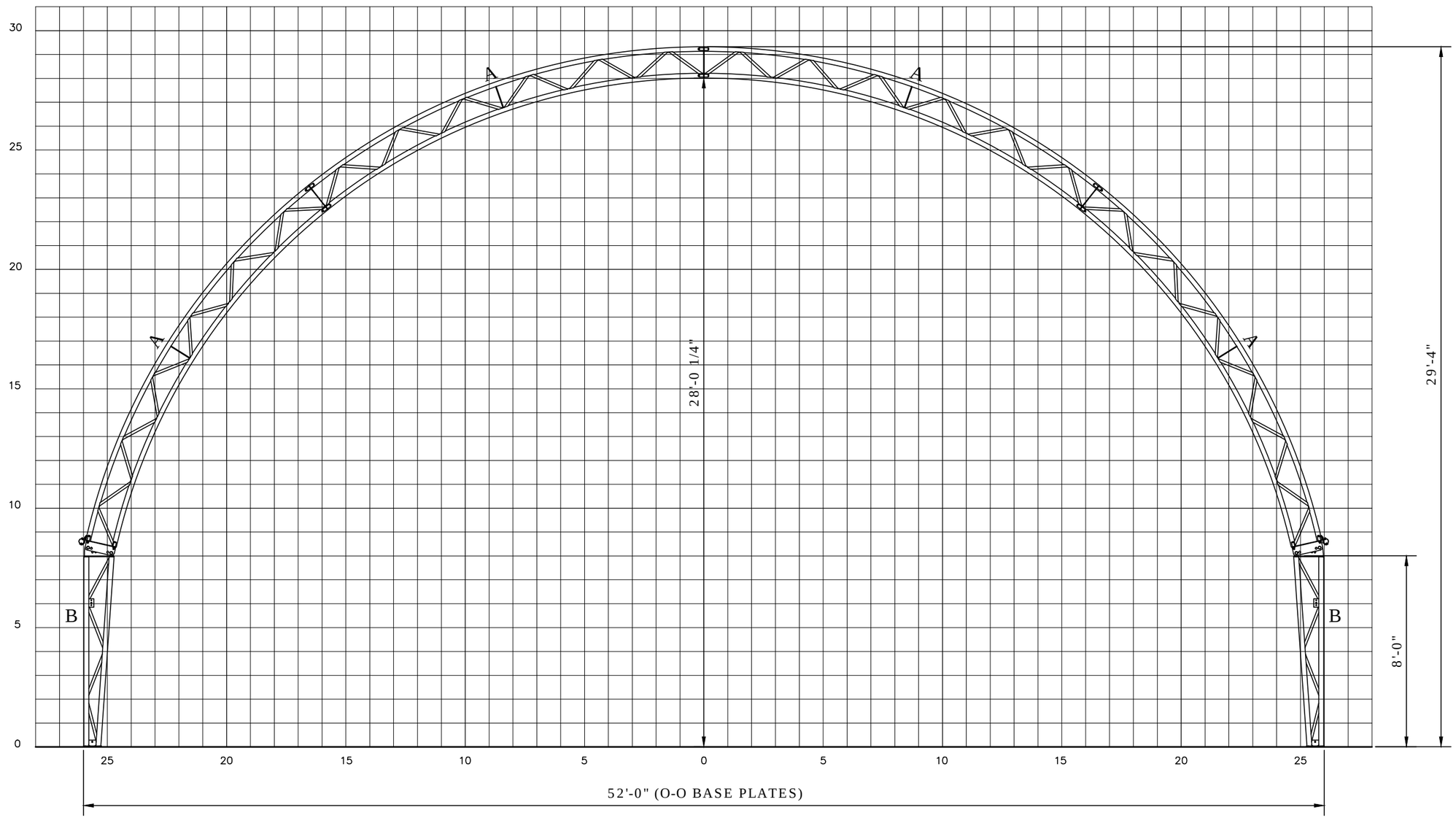

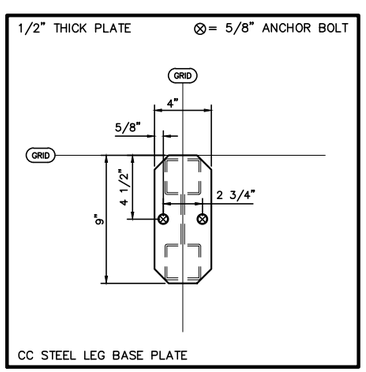

52 CC TRUSS COMPONENT SCHEDULE		
MARK	PART No.	DESCRIPTION
A	TR5002A	52 CC TRUSS SECTION
B	LE5021A	8'–0" CC COMMON LEG
PROFILE WEIGHT = 707 LBS.		